LT 3-1、2 Medium Frequency ceramic filter(300~1000KHz)

Application

It is suitable for medium frequency amplifying filter circuit in small radio communication, or other frequency selective filter circuit.

Technical reference

MK0.219.001JT

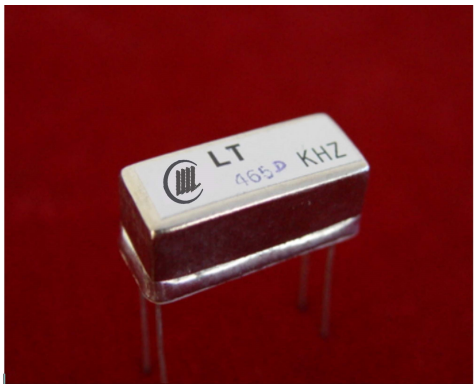

Working conditions

Temperature range: -45～+55℃

Vibration: 10～50HZ, acceleration 5g;

Max working voltage: DC≤5v, AC≤3v

Humidity: ≤95％

Shock: 60times/min., acceleration 35g

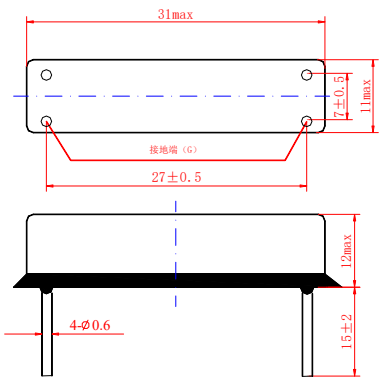

LT3-1

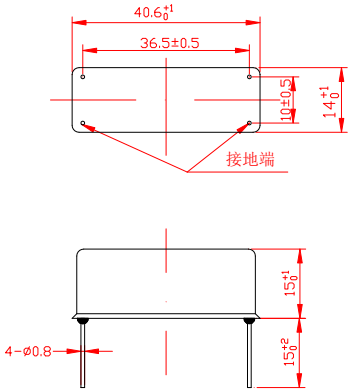

LT3-2

Group	Centre frequency (kHz)	Passband width △f6dB(kHz)	Insertion loss(dB)	Passband ripple(dB)	Stop-band attenuation(dB)	Stop band (kHz)	Rectangular coefficient	
A	465±0.5	1.1~1.7	≤15	≤3	40	f_0±50	△f40dB/△f6dB	≤3
B		1.7~2.5	≤12					
C	465±1	2.5~4	≤10					≤2.5
D		4~5.5			50			
E		5.5~7.5	≤8					
F		7.0~9.5				f_0±100	△f50dB/△f6dB	
G		9.5~12						≤2
H	465±1.5	12~15	≤6					
I		15~20						
J		20~25						
K		25~30						
L		30~35						
N		35~40						
P		40~60						

LT 455/465 -6~7 Medium Frequency Ceramic Filter

Application

Applicable to tape recorders, small mobile civil radio and other medium frequency filter circuit

Technical reference

MK2.067.018JT

Working condition

Temperature range: -20～+55℃

Vibration: 10～50HZ, acceleration 5g；

Max working voltage: DC≤5V, AC≤3V

Humidity: ≤90％

Shock: 60times/min., acceleration 10g

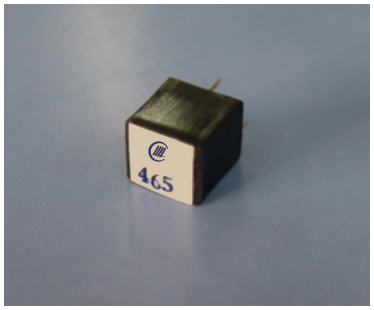

LT465-6

LT465 –7

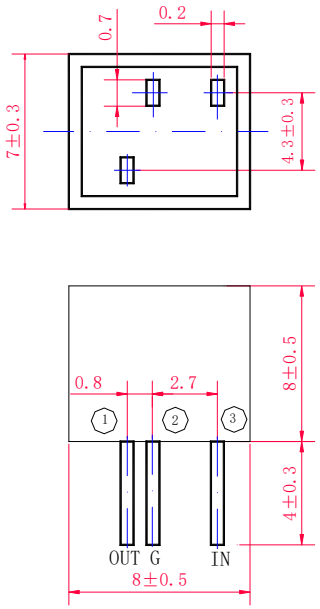

LT465-6

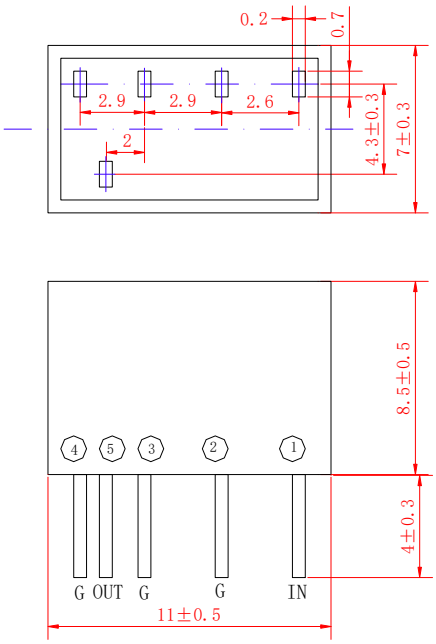

LT465-7

<table>
<tr><th rowspan="2">Type</th><th rowspan="2">Bandwidth group</th><th rowspan="2">6dB Bandwidth KHz</th><th rowspan="2">Stopband width kHz</th><th colspan="2">Stopband attentuation⩾dB</th><th rowspan="2">Insertion loss(dB)</th><th rowspan="2">Matching impedance (kΩ)</th><th rowspan="2">Passband ripple(dB)</th></tr>
<tr><th>LT465-6</th><th>LT465-7</th></tr>
<tr><td rowspan="9">LT465-6
LT465-7</td><td>A</td><td>⩾±2</td><td>⩽±7.5</td><td rowspan="3">25</td><td rowspan="9">35</td><td rowspan="5">⩽6</td><td rowspan="3">2</td><td rowspan="3">⩽2</td></tr>
<tr><td>B</td><td>⩾±3</td><td>⩽±9</td></tr>
<tr><td>C</td><td>⩾±4.5</td><td>⩽±10</td></tr>
<tr><td>D</td><td>⩾±6</td><td>⩽±12.5</td><td rowspan="6">27</td><td rowspan="6">1.5</td><td rowspan="6">⩽3</td></tr>
<tr><td>E</td><td>⩾±7.5</td><td>⩽±15</td></tr>
<tr><td>F</td><td>⩾±10</td><td>⩽±20</td><td rowspan="4">⩽4</td></tr>
<tr><td>G</td><td>⩾±12.5</td><td>⩽±25</td></tr>
<tr><td>H</td><td>⩾±15</td><td>⩽±30</td></tr>
<tr><td>I</td><td>⩾±17.5</td><td>⩽±35</td></tr>
</table>

LTM-455Medium Frequency Ceramic Filter

Features and Application

The product is small, suitable for medium frequency amplifying circuit of ships and other small wireless communications equipment, or other frequency selective filter circuit

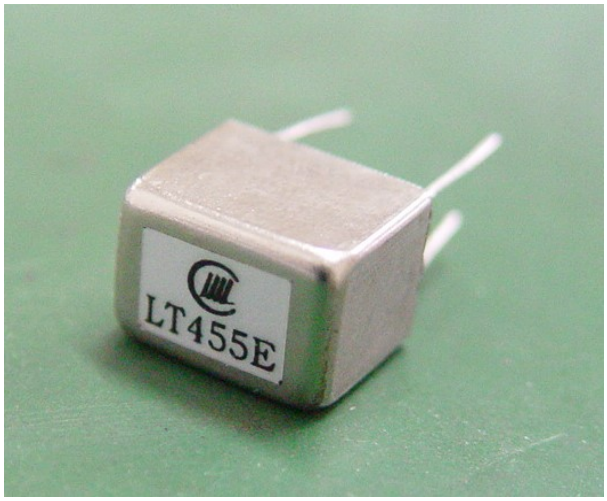

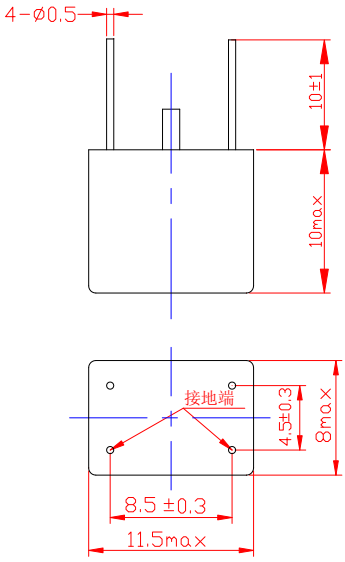

Bandwidth group	Centre frequency (kHz)	Band width △ f3dB(KHz)	Insertion loss(dB)	Passband ripple(dB)	Stopband attenuation(dB)	Stopband range(kHz)	Rectangular coefficient	Matching impedance (kΩ)
A	455±0.5	≥±2	≤10	≤1.5	≥30	f_0±50	≤3	2
B	455±0.5	≥±3	≤8	≤1.5	≥30	f_0±50	≤3	2
C	455±1	≥±4.5	≤6	≤1.5	≥35	f_0±50	≤2.5	2
D	455±1	≥±6	≤4	≤1.5	≥40	f_0±100	≤2.5	1.5
E	455±1	≥±7.5	≤3	≤1.5	≥40	f_0±100	≤2	1.5
F	455±1.5	≥±10	≤3	≤1.5	≥40	f_0±100	≤2	1.5
G	455±1.5	≥±12.5	≤3	≤2	≥40	f_0±100	≤2	1.5
H	455±1.5	≥±15	≤3	≤2	≥40	f_0±100	≤2	1.5
I	455±2	≥±17.5	≤3	≤2	≥40	f_0±100	≤2	1.5

LT 500 A~P Medium Frequency Ceramic Filter(412~600KHz)

Application

Applicable to 15W single sideband communication, or medium frequency amplifying circuit of electronic equipment, for frequency selection

Technical reference

MK0.219.010JT

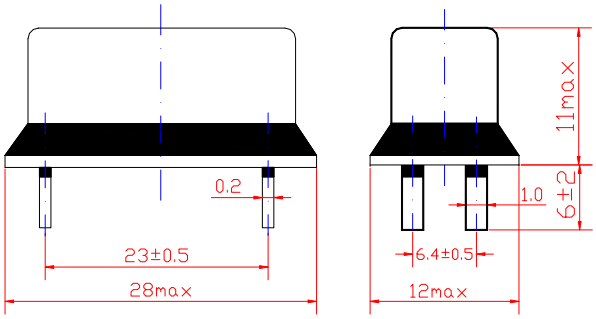

Band width group	Centre frequency (kHz)	Band width (kHz) 3dB	Band width (kHz) 6dB	Insertion loss(dB)	Fluctuation (dB)	Stopband attenuation(dB)	Stopband range(kHz)	Rectangular coefficient	
A	500±0.5		≥1.1	≤15	△f-3dB 时 ≤1.5 △f-6dB 时 ≤3	≥40	f_0±50	△f40dB/△f3dB 或△f6dB	≤3
B			≥1.7	≤12					
C	500±1		≥2.5	≤10					≤2.5
D			≥4			≥50			
E			≥5.5	≤8					
F		≥8					f_0±200	△ f 50dB/△ f 3dB 或△f6dB	≤2
G			≥9.5				f_0±100		
H	500±2		≥12	≤4					
I			≥15						
U	500±1	≥16	—	≤3					
J	500±2		≥20	≤4					
K			≥25						
L			≥30						
N			≥35						
P			≥40						

Note: The center frequency is the arithmetic mean of the up and down cut-off frequency of the passband.

LT32 High frequency ceramic filter

Features and Application

This product is made of piezoelectric ceramic material, applicable to dual-band radio, television, microwave communication filter applications

Technical reference

MK2.067.018JT

Working conditions

Temperature range: -40～70℃

Humidity: ≤98％

Vibration: 10～55HZ, acceleration 5g;

Shock: 60times/min., acceleration 35g

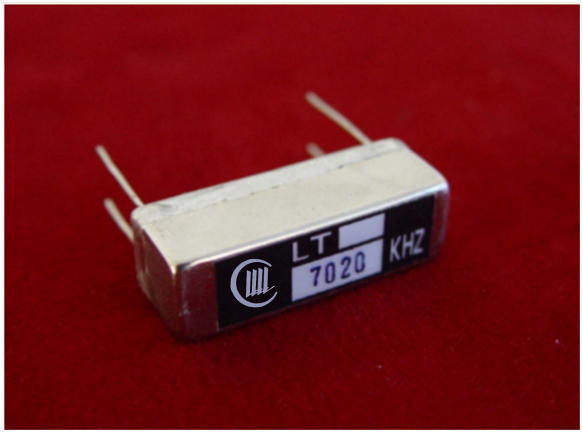

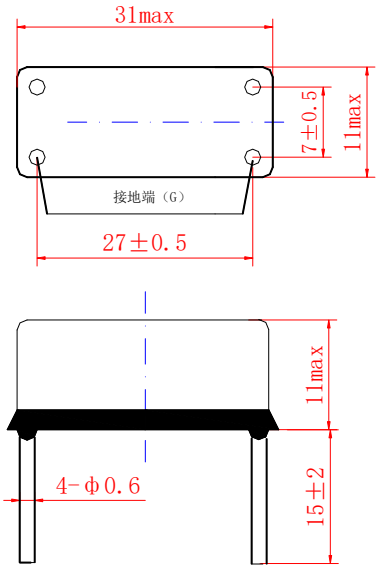

Nominal frequency (MHz)	deviation (kHz)	Insert loss (dB)	3dB bandwidth (kHz)	Rectangular coefficient (△f40dB/△f 3dB)	Fluctuation (dB)	Stopband attenuation (dB)	Matching impedance (Ω)
5.0 5.5	±10	≤8	≥±80	≤3	≤2	≥40	470
6.0 6.5			≥±100				
7.0 7.3			≥±100		≤1.5		510
7.02 7.50 8.065 8.590 9.023 9.30	±15		≥±120				
10.7	±20		≥±150				

Remark: Customized products can be offered.

LT5.65~10.7MHz High frequency ceramic filter

Features and Application

The product is made of piezoelectric material, which is small, light weight, suitable for single sideband radio, TACAN and other radio.

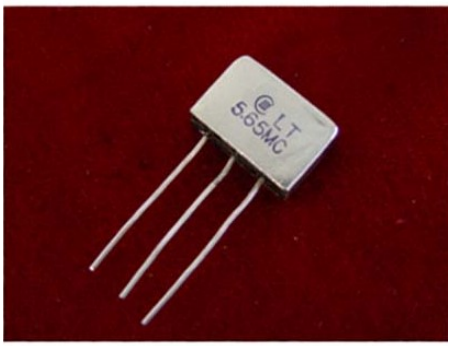

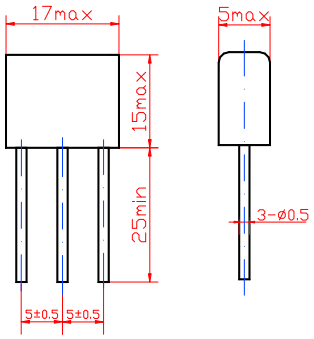

Nominal frequency (MHz)	deviation (kHz)	Insert loss (dB)	3dB bandwidth (kHz)	Rectangular coefficient (△f40dB/△f 3dB)	Fluctuation (dB)	Stopband attenuation (dB)	Matching impedance (Ω)
5.65	±15	≤8	180~240	≤3	≤2	≥40	470
10.7	±20	≤10	400~440			≥55	510

Remark: Customized products can be offered.

LT7~8 Low frequency narrowband ceramic filter

Features and Application

This product is made of piezoelectric ceramic material, suitable for frequency division or frequency selective filter circuit of multi-carrier communication machine.

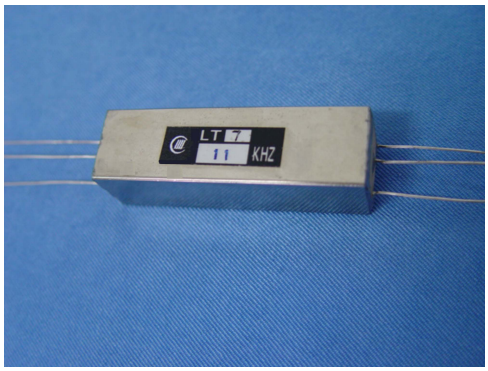

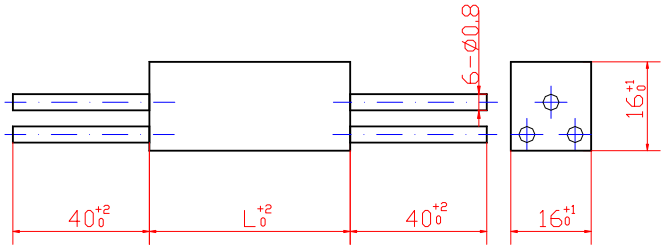

Type	Frequencyf_0(kHz)	Passband (△f 3dB)	Passband attenuation(dB)	Passband Fluctuation(dB)	Stopband attenuation	Matching impedance (kΩ)	Size(mm)
LT7-1	10~18	$f_0 \pm 0.4$ f_0%	≤9	≤3	≥40dB	3~5	55
LT7-2	18~36		≤7				45
LT7-3	36~60						35
LT8-1	1.0~2.9		≤9			5~10	65
LT8-2	3.0~4.9		≤7				55
LT8-3	5.0~10						40

XZT455E Low Frequency Ceramic Resonator

Features and Application

The use of drawer type core structure has good stability and moisture resistance. The product has the characteristics like high piezoelectric activity, high insulation resistance, Low resonant equivalent resistance(<10Ω), high Qm, low dielectric constant and stable oscillation frequency.

Implement standard

Q/MK81-2005

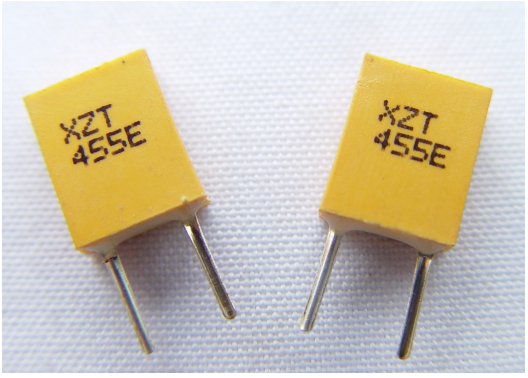

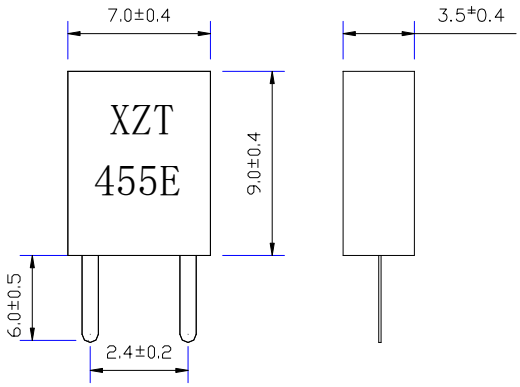

No.	Characteristics	Unit	Data
1	Resonant frequency	kHz	455
2	Resonance resistance	Ω	≤10
3	Free capacitance	pF	285±20%
4	Insulation resistance	Ω	≥5×109
5	Withstand voltage	VDC	100
6	Rated peak voltage	VP-P	15
7	Rated tributary voltage	VDC	5
8	Climate type	—	-20℃ ~+80℃
9	Temperature characteristics	—	<±1%